B-cell-based vaccination elicit potent immunity against glioblastoma

Catalina LEE-CHANG

Assistant Professor

Neurological Surgery

Northwestern University

Glioblastoma is lethal malignant brain tumor

Shivani Baisiwala
Ahmed's Lab

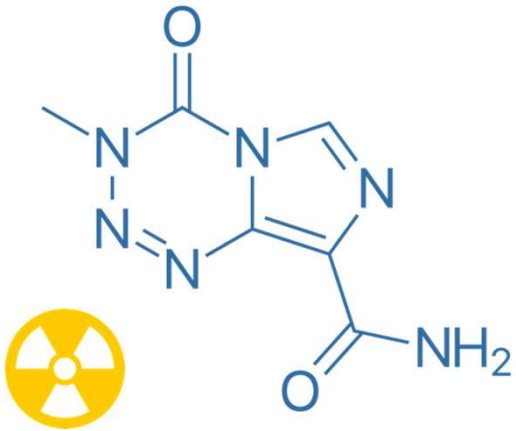

DIAGNOSIS → RESECTION → TMZ XRT + TTF → REMISSION → RECURRENCE

13,000
annual cases in the US
(most common primary malignant brain tumor)

21 Month
average remission

~100%
fatality rate

Glioblastoma is lethal malignant brain tumor

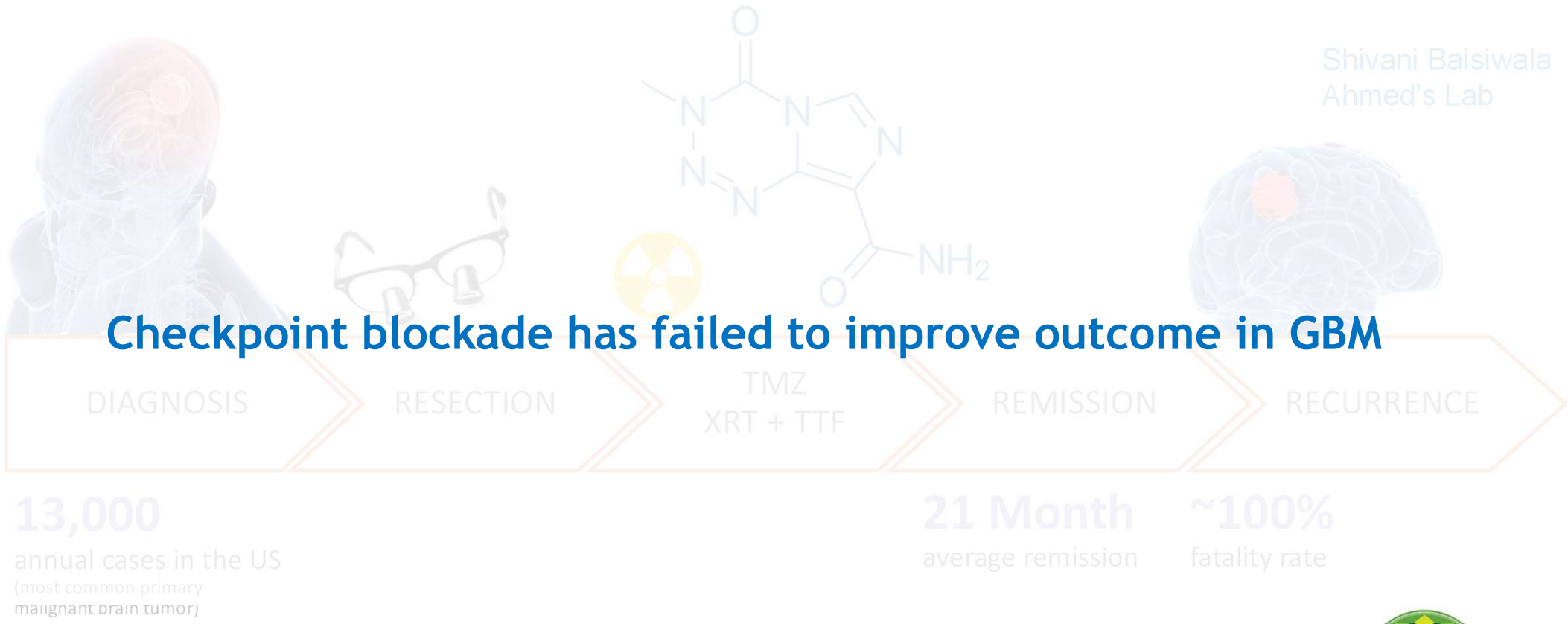

Checkpoint blockade has failed to improve outcome in GBM

Proinflammatory B cells as APC to boost anti-tumor immunity

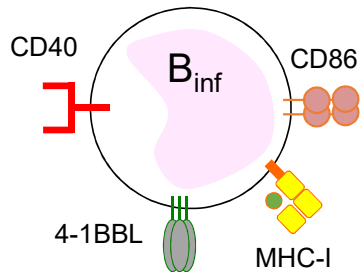

Boost CD8 T-cell immune response

- B16 melanoma and 4T1 mammary carcinoma
  - Aging-associated systemic inflammation
    - Obesity-induced metabolic disorders

Bodogai and Lee-Chang, et al. Cancer Research. 2013
Lee-Chang, et al. Blood. 2014
Lee-Chang, et al. J Immunology. 2016
Bodogai et al. Sci Transl Medicine. 2018

B-cell-based Immunotherapy

- Generation of B-cell-based vaccine
- B_{Vax} effector function – activation of CD8 T cells
- B_{Vax} effector function – production of antibodies
- B_{Vax} therapeutic properties preclinical GBM model

B-cell-based Immunotherapy

Generation of B-cell-based vaccine

B_{Vax} effector function – activation of CD8 T cells

B_{Vax} effector function – production of antibodies

B_{Vax} therapeutic properties preclinical GBM model

Research Article

Cancer Immunology Research, 2019

Myeloid-derived suppressive cells promote B cell-mediated immunosuppression via transfer of PD-L1 in glioblastoma

Catalina Lee-Chang, Aida Rashidi, Jason Miska, Peng Zhang, Katarzyna C Pituch, David Hou, Ting Xiao, Mariafausta Fischietti, Seong Jae Kang, Christina L Appin, Craig Horbinski, Leonidas C. Platanias, Aurora Lopez-Rosas, Yu Han, Irina V Balyasnikova, and Maciej S Lesniak

DOI: 10.1158/2326-6066.CIR-19-0240 Check for updates

- Identification of immunosuppressive B cells in GBM – Phenotype and functional characterization
- TAMC promote suppression via vesicular delivery : intercellular communication
- B-cell subsets with different pro/anti-tumor functions

4-1BBL-expressing B cells in Glioblastoma

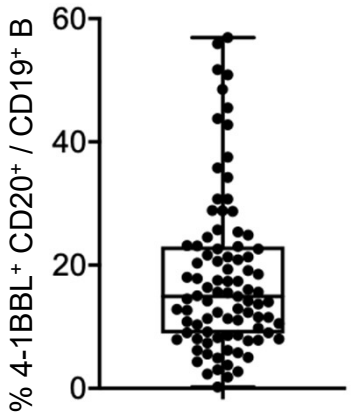

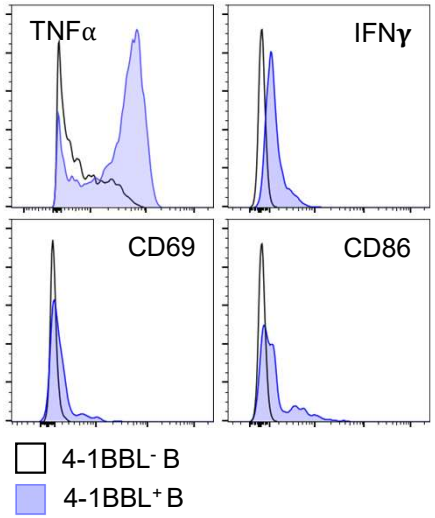

Generation of B-cell-based vaccine - B_{Vax}

CT2A/GL261-bearing mice SLO
GBM patient peripheral blood

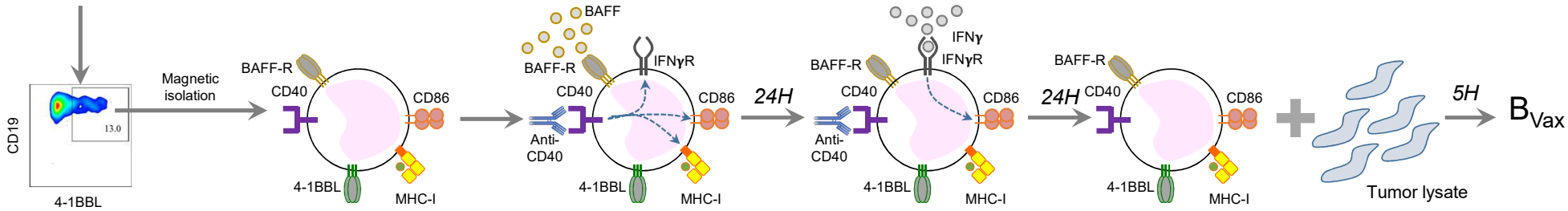

Generation of B-cell-based vaccine - B_{Vax}

CT2A/GL261-bearing mice SLO
GBM patient peripheral blood

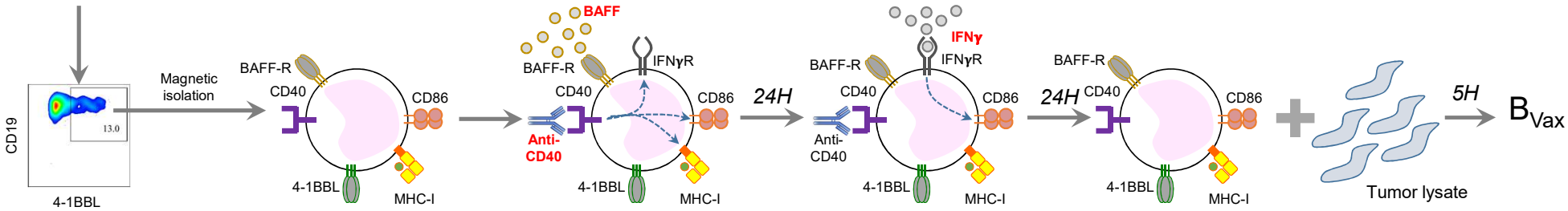

B-cell-based Immunotherapy

Generation of B-cell-based vaccine

B_{Vax} effector function – activation of CD8 T cells

B_{Vax} effector function – production of antibodies

B_{Vax} therapeutic properties in preclinical GBM model

B_{Vax} activate and enhance $CD8^+$ T cells recruitment to the tumor-bearing brain

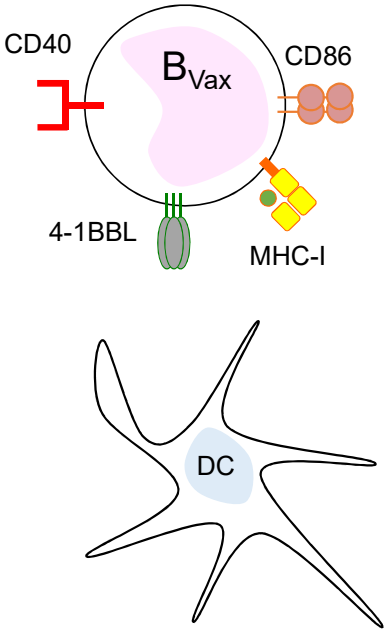

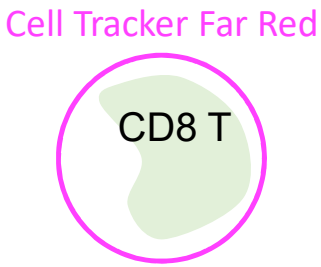

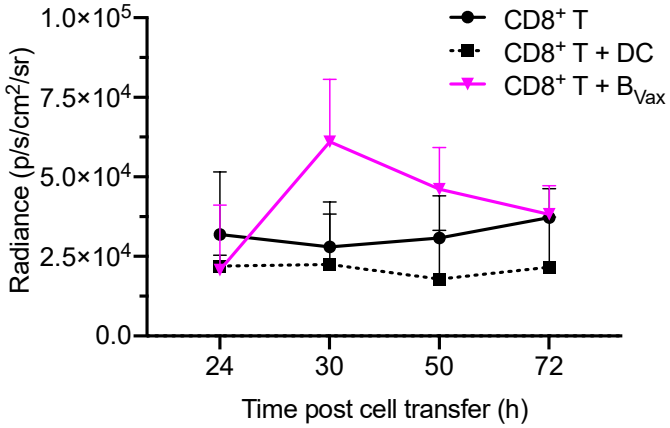

B_{Vax} activate and enhance $CD8^+$ T cells proliferation in the tumor-bearing brain

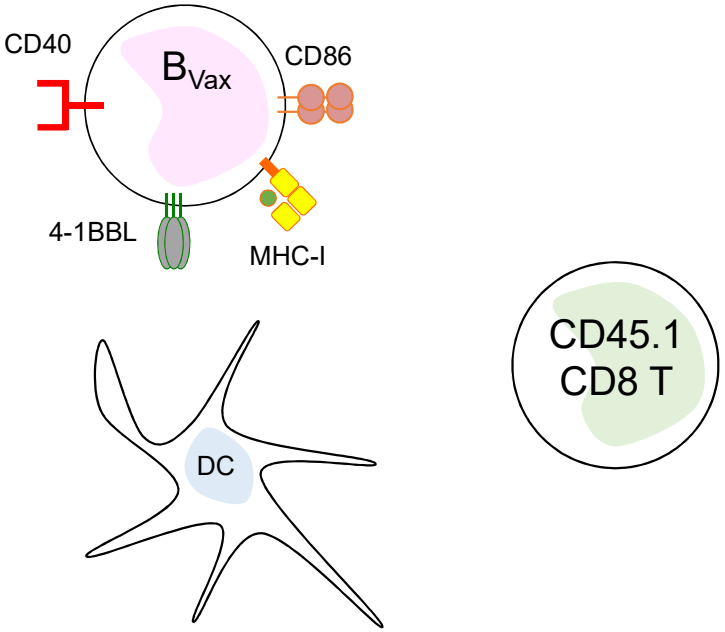

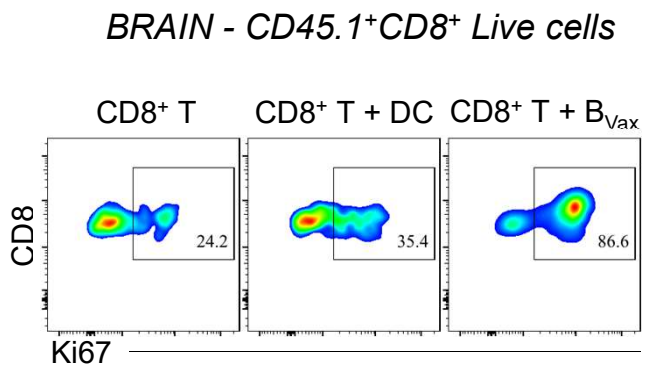

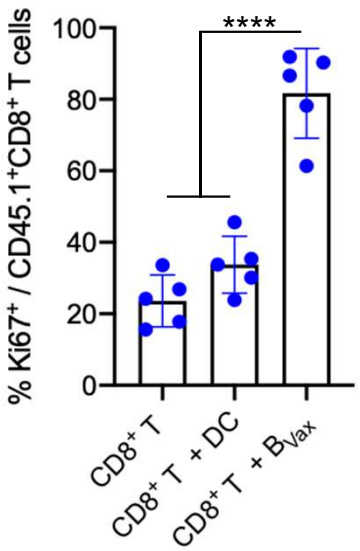

GBM patient-derived B_{Vax} activate and enhance $CD8^+$ T cells anti-tumor effect

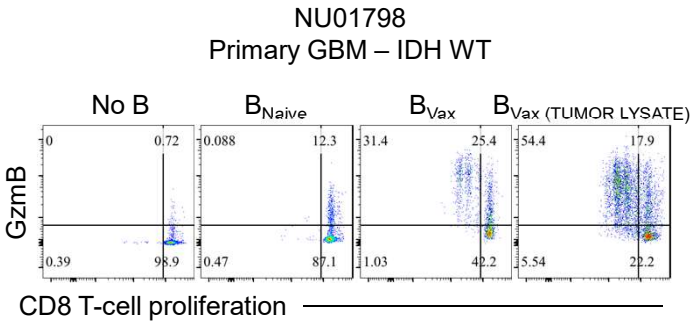

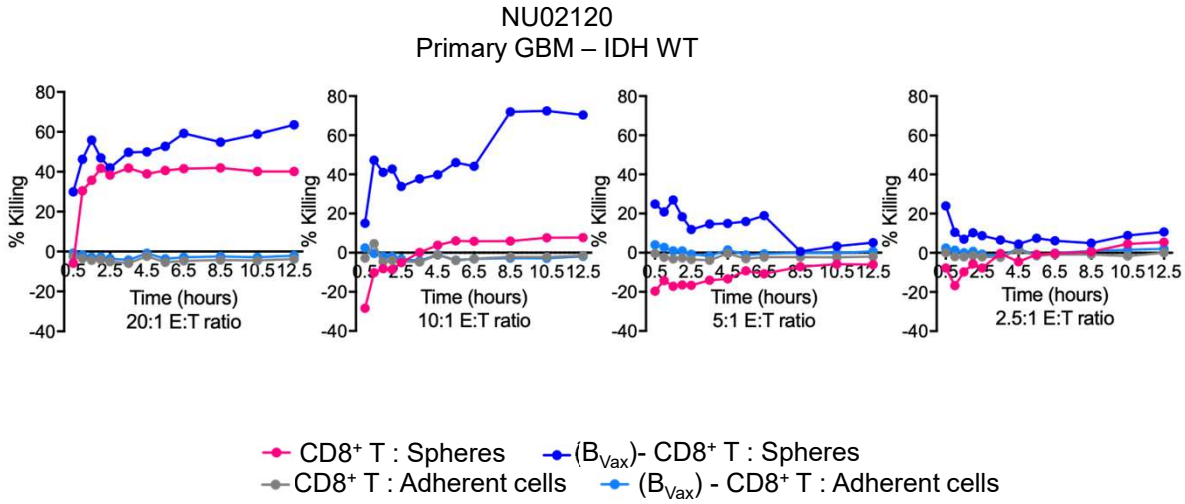

B-cell-based Immunotherapy

Generation of B-cell-based vaccine

B_{Vax} effector function – activation of CD8 T cells

B_{Vax} effector function – production of antibodies

B_{Vax} therapeutic properties in preclinical GBM model

B_{Vax}-derived antibody production in-vivo

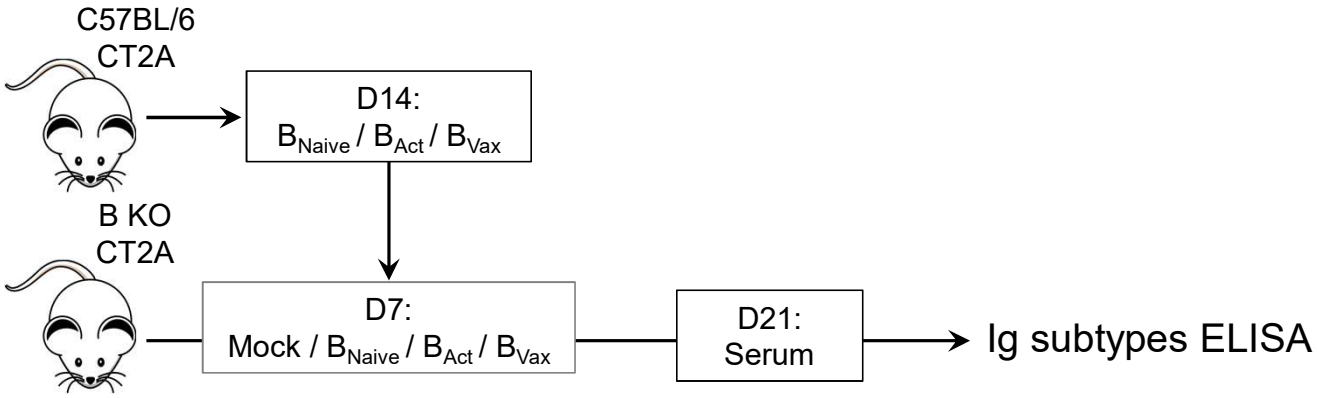

B_{Vax} predominantly produce IgGs in-vivo

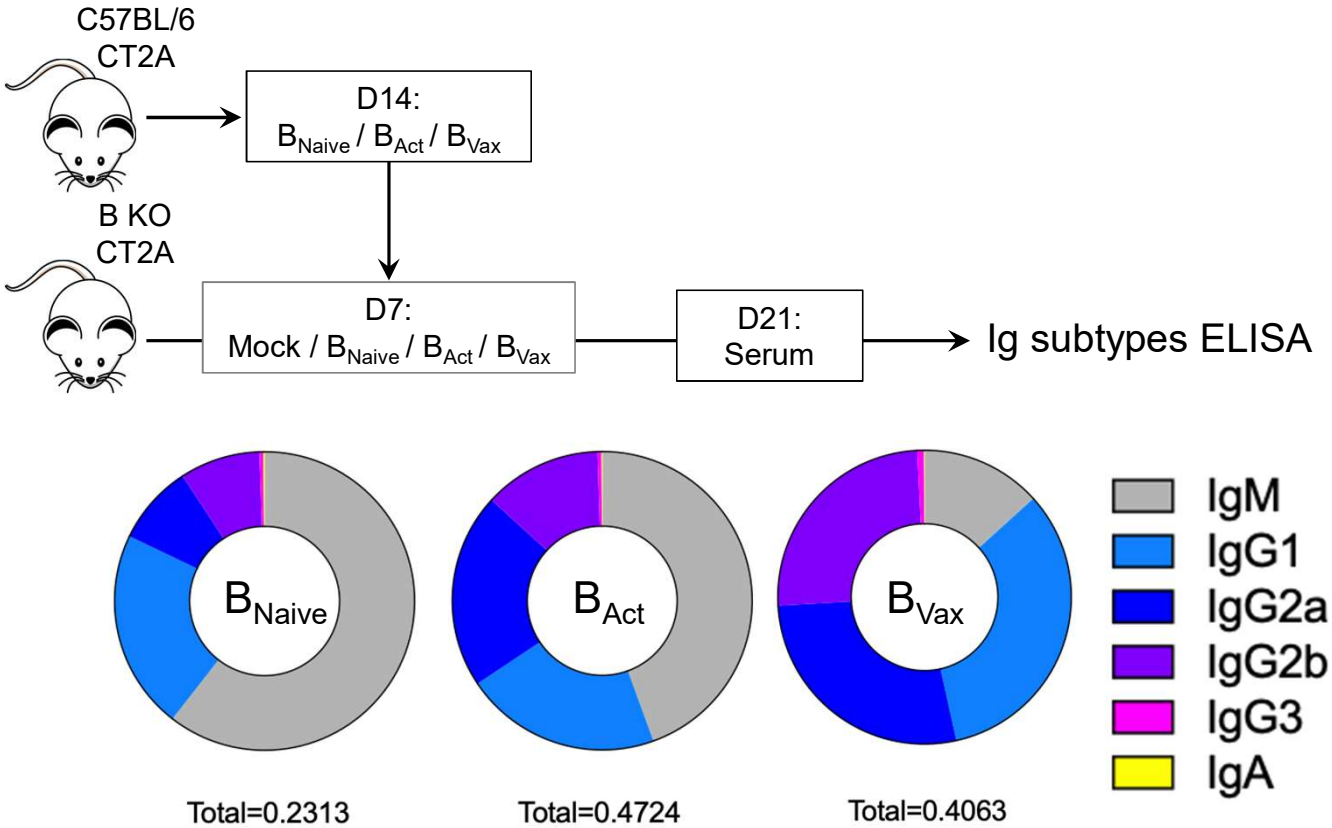

B_{Vax}-derived IgG react to tumor cells

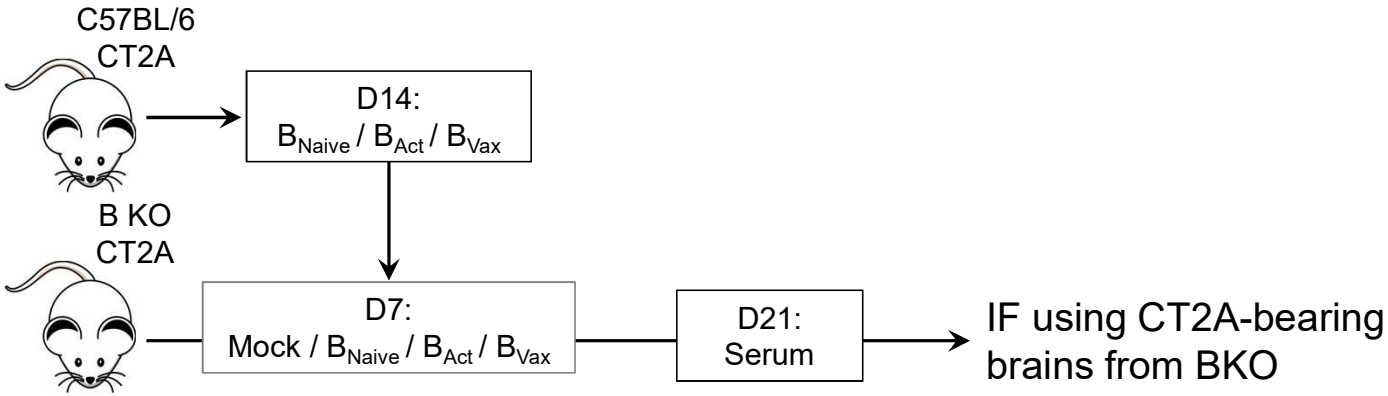

B_{Vax}-derived IgG react to tumor cells

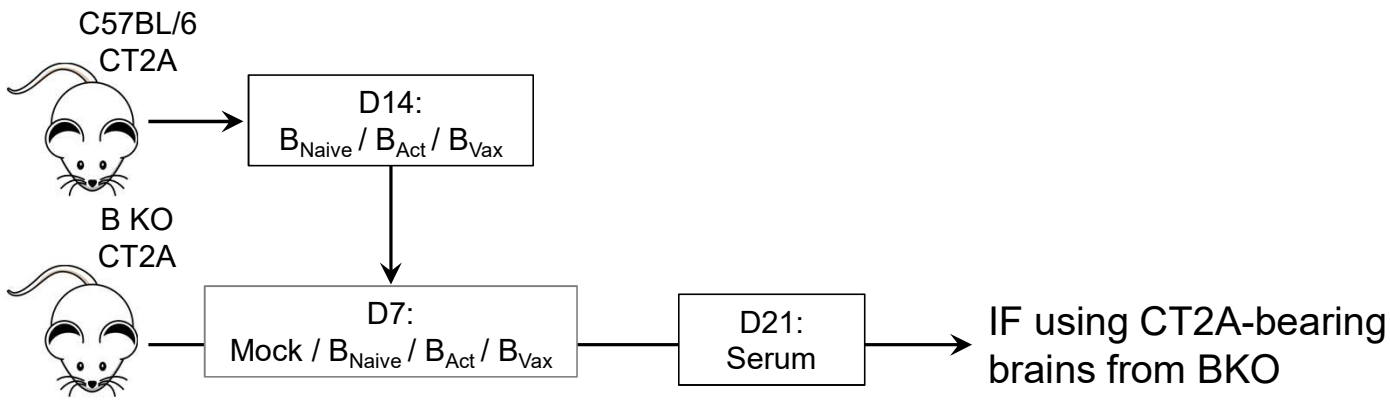

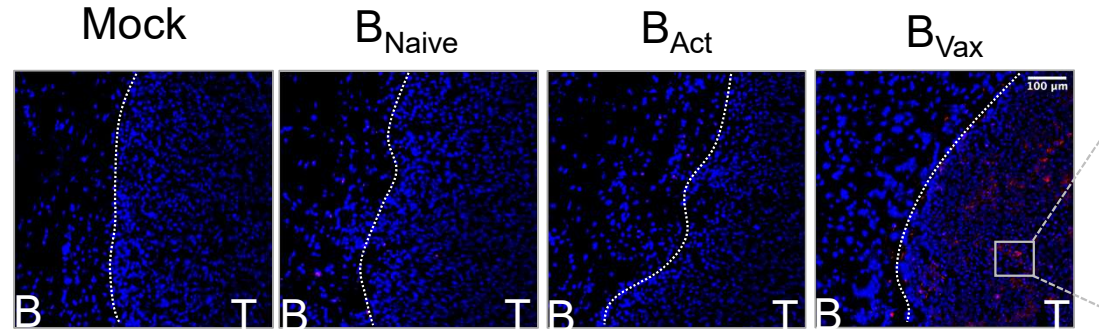

DAPI / Mouse IgG

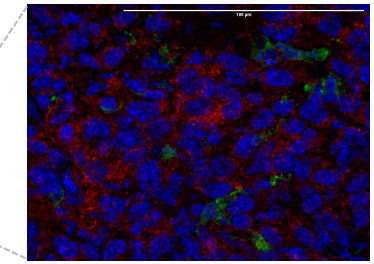

DAPI / Mouse IgG / CD11b

B_{Vax}-derived IgG treatment extend CT2A-bearing animal survival

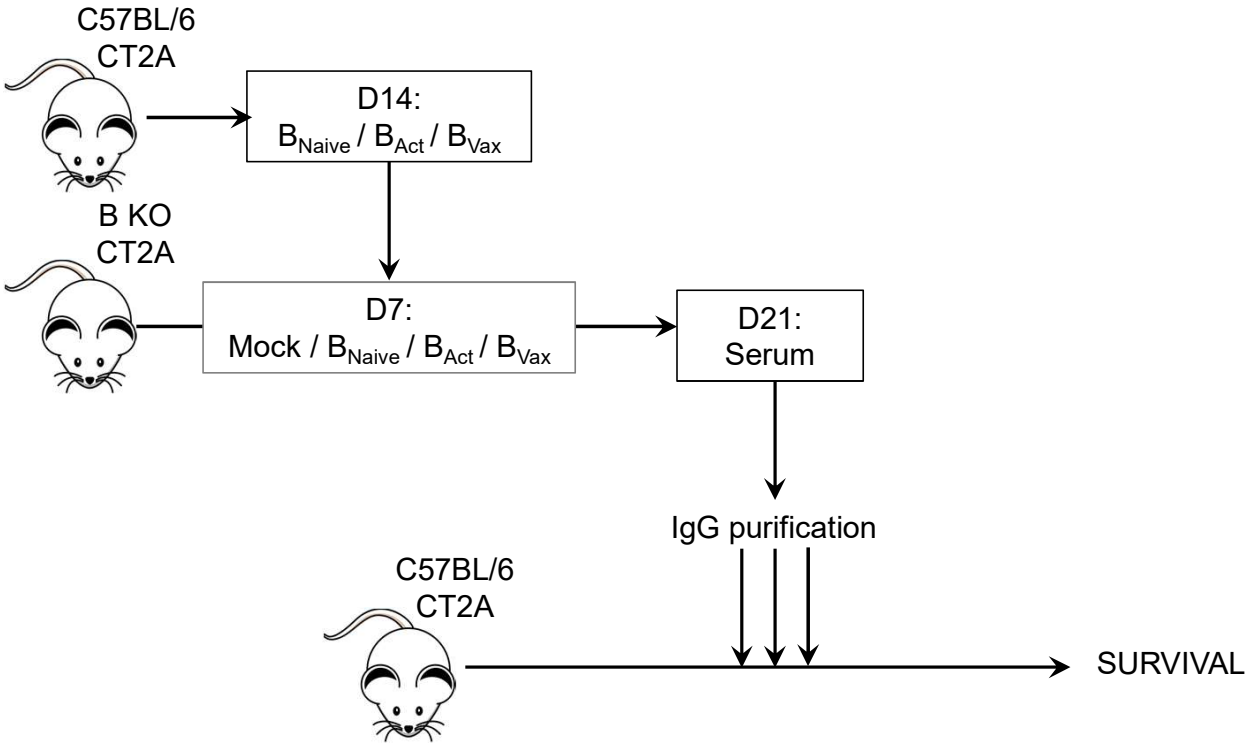

B_{Vax}-derived IgG treatment extend CT2A-bearing animal survival

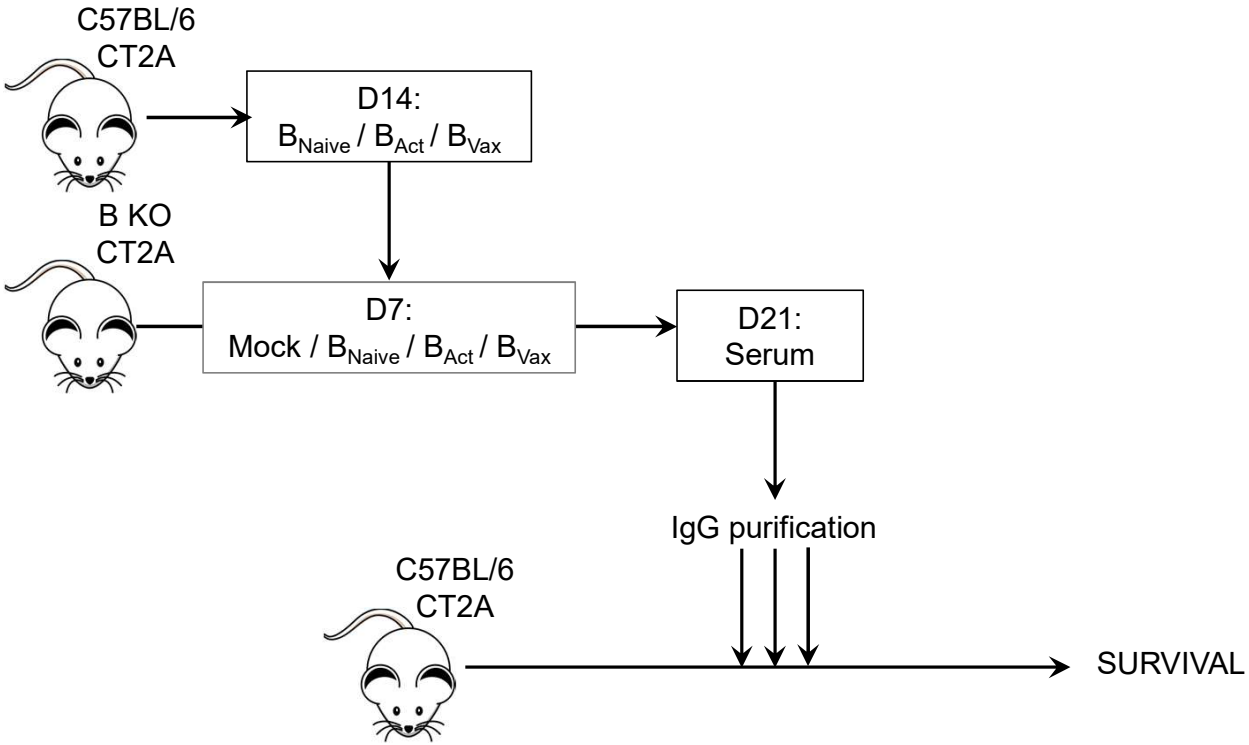

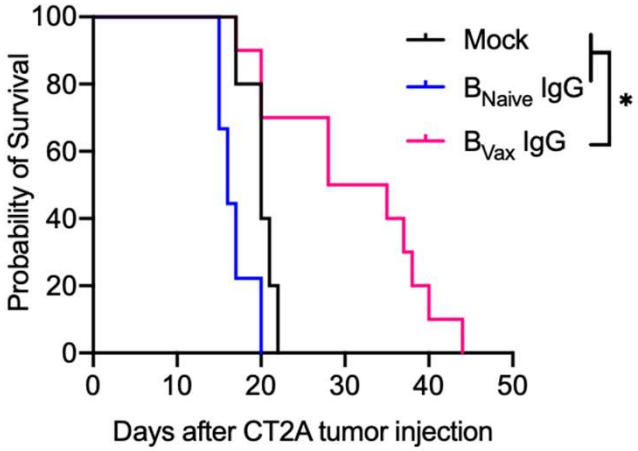

B-cell-based Immunotherapy

Generation of B-cell-based vaccine

B_{Vax} effector function – activation of CD8 T cells

B_{Vax} effector function – production of antibodies

B_{Vax} therapeutic properties in preclinical GBM model

Combinatorial therapy: RT + cellular immunotherapy (B_{Vax} and CD8 T) + checkpoint blockade (aPD-L1) provides long-term animal survival

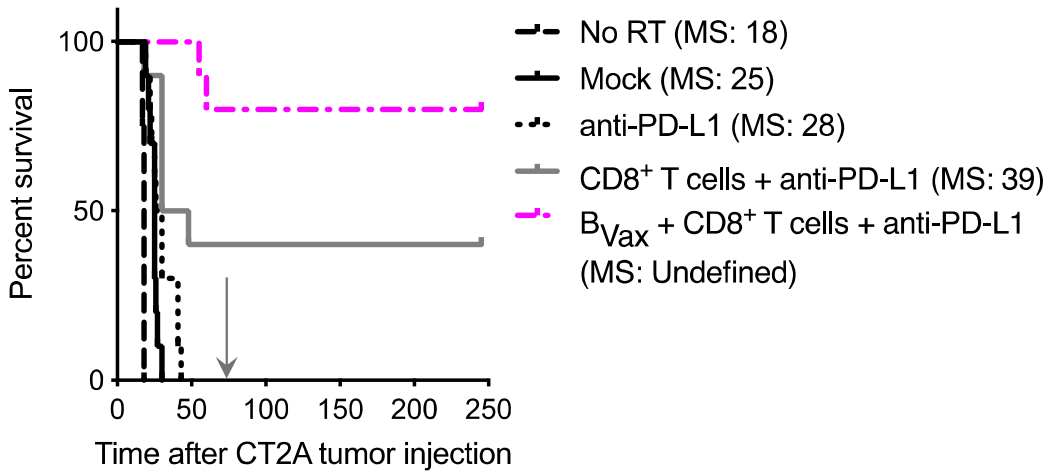

Combinatorial therapy: RT + cellular immunotherapy (B_{Vax} and CD8 T) + checkpoint blockade (aPD-L1) provides long-term animal survival

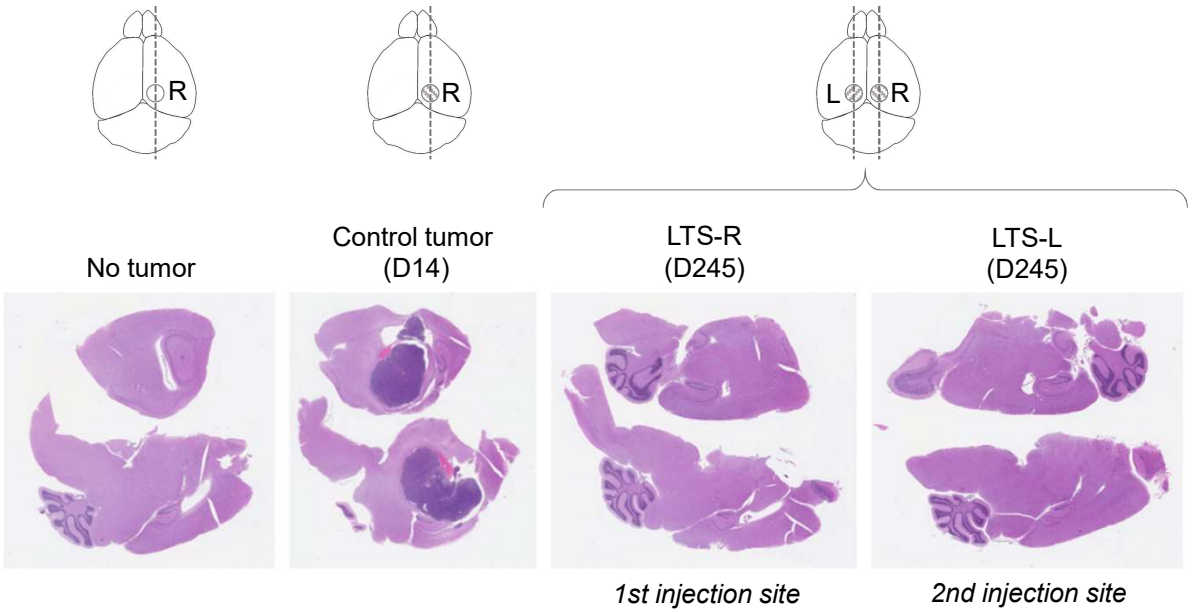

Significant enrichment of activated IFNg$^+$CD44$^+$CD8$^+$ T cells in the brain

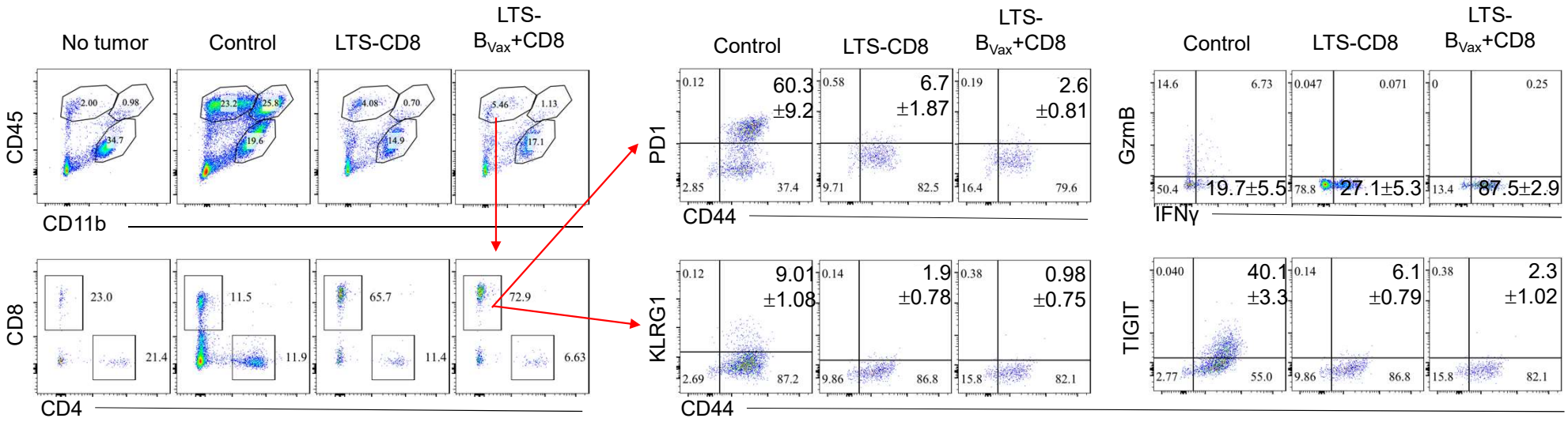

Ly: Lymphocytes
My: Bone marrow derived myeloid cells
Mi: Microglia

CD8+ T-cell infiltration pattern associated to tumor clearance

LTS-B_{Vax}+CD8 R

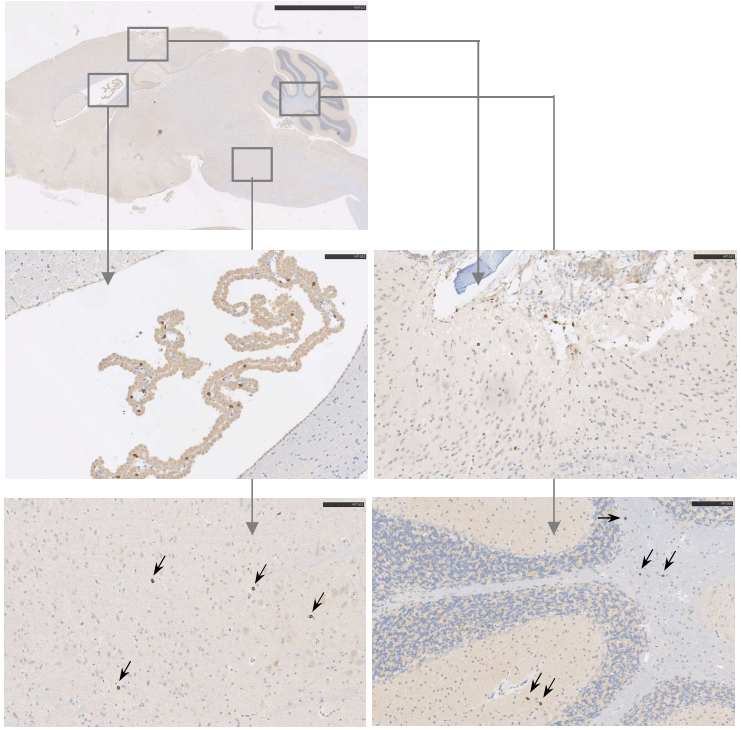

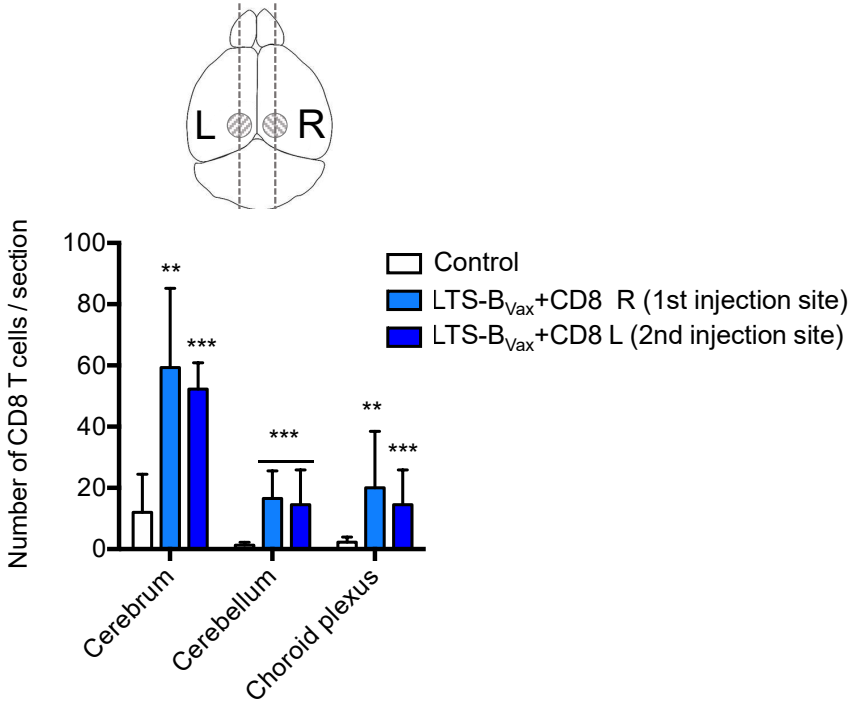

Effect of B_{Vax} in combination with whole brain RT and TMZ and checkpoint blockade

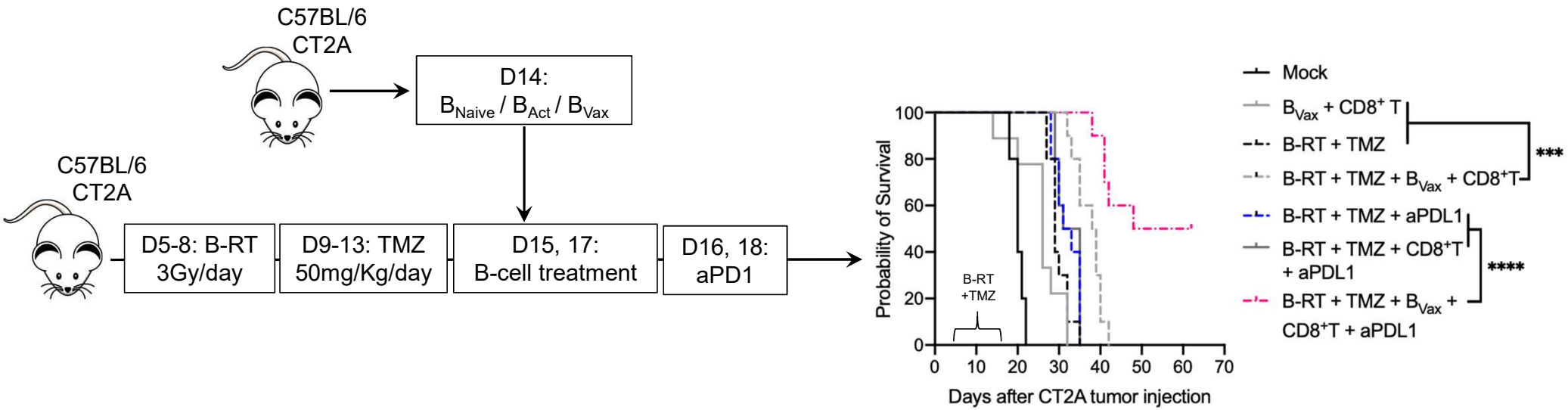

Thank you!

Northwestern Medicine
Lurie Comprehensive Cancer Center of NU
Malnati's Brain Tumor Institute
Department of Neurological Surgery

Maciej Lesniak
Jason Miska
Aida Rashidi
Peng Zhang
Rachel Burga
Irina Balyasnikova
Craig Horbinski
Adam Sonabend

David Hou (MS1)
Feinberg Medical School
Northwestern University

Brandyn Castro, MD (PGY5)
Department of Neurosurgery
University of Chicago

Mark Dapash (MS4)
Pritzker School of Medicine
University of Chicago